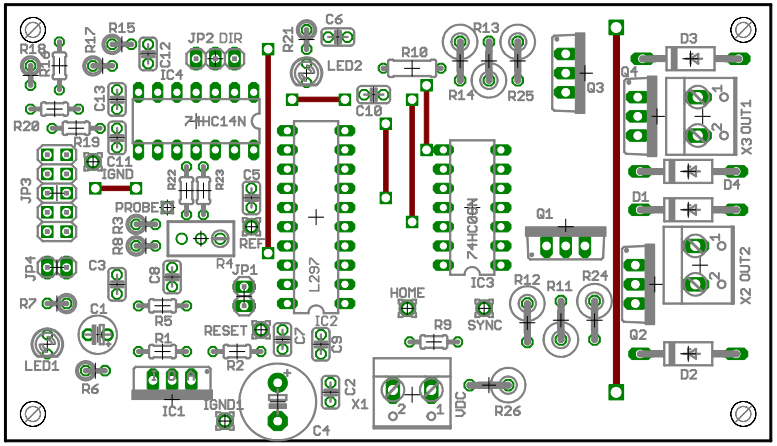
R16
R18
R17
R15
IC12
JP2 DIR
IC4
74HC14N
C13
R20
R19
C11
1GND
JP3
R22
R23
C5
PROBE
R3
R8
REF
R4
JP4
C3
C8
JP1
R7
C1
R5
RESET
R1
R2
LED1
R6
IC1
IGND1
C4
C2
X1
VDC
R26
R21
C6
LED2
C10
L297
IC2
C7
C9
R10
R13
R14
R25
74HC00N
IC3
HOME
SYNC
R9
R12
R11
R24
Q3
Q1
Q4
Q2
D3
D4
D1
D2
X3 OUT1
X2 OUT2